Basic of Networking

VISHWANATH M S

VISHWACLOUDLAB.ORG

Major Concepts in Network

- Same Network – Switch
- Different Network -- Router

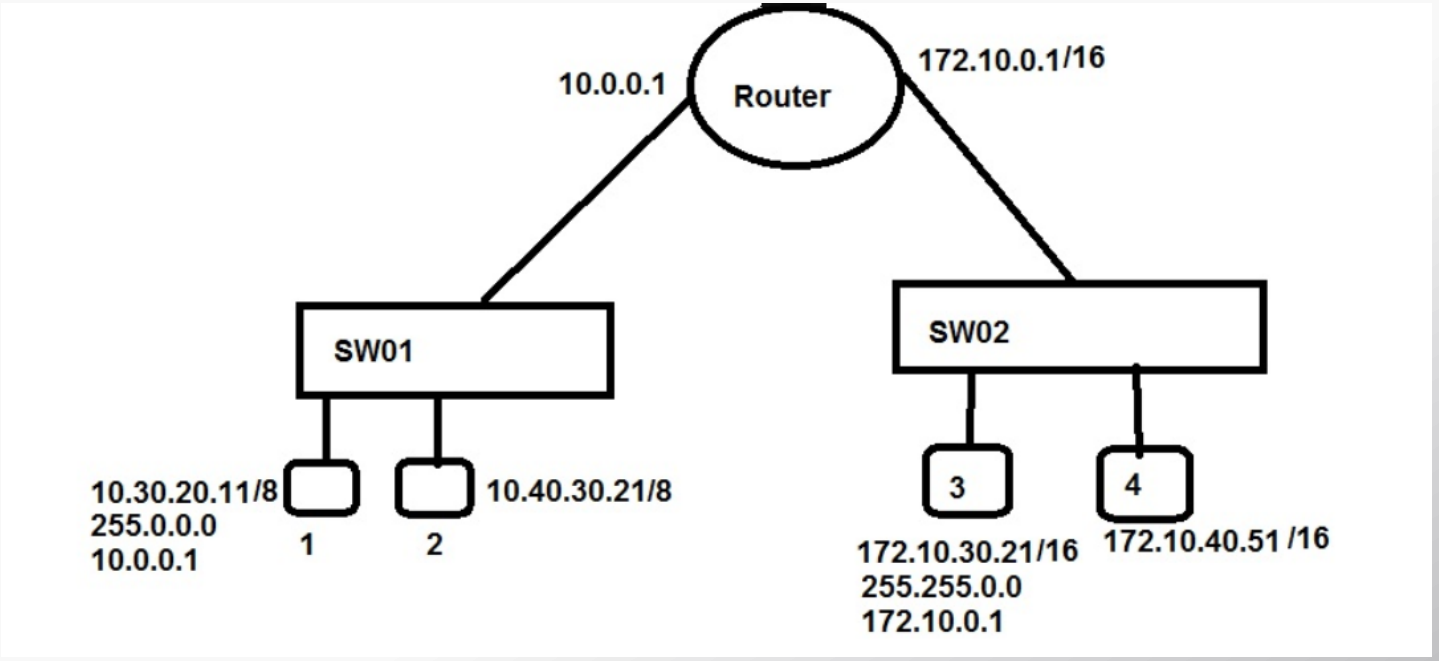

- PC – Traffic Generator
  - Switch and Router

  DOES NOT generate Traffic, they only **manage** it

- IP Address – Its an tool used by PC for sending packets from Source to Destination

VISHWACLOUDLAB.ORG

Basic Networking continued…..

Two types of IP address

IPv4 – 32 bit

IPV6 – 128 bit

Binary to Decimal Conversation

0000 0000 → 0 – Min Value

1111 1111 → 255 – Max Value

IPv4 address format

X	.X	.X	.X
8bit	8bit	8bit	8bit
1st Octet	2nd Octet	3rd Octet	4th Octet

00000000.00000000.00000000.00000000

VISHWACLOUDLAB.ORG

Binary to Decimal Conversion & ViceVersa

Find Decimal value of below Binary octets

Eg1: - 10010001

Eg2: - 11100011

	2^7	2^6	2^5	2^4	2^3	2^2	2^1	2^0	
	128	64	32	16	8	4	2	1	
Eg1: -	1*128 +	0*64 +	0*32 +	1*16 +	0*8 +	0*4 +	0*2 +	1*1	→ 128+16+1 = 145
Eg2: -	1	1	1	0	0	0	1	1	→ 128+64+32+2+1 = 227
Eg3: -	1	1	0	0	1	1	0	0	→ ???
Eg4: -	1	0	1	0	1	0	1	0	→ ???

VISHWACLOUDLAB.ORG

IP address V4

An IP address is a 32-bit address and are unique.

The address space of IPv4 is 2^32 or 4,294,967,296.

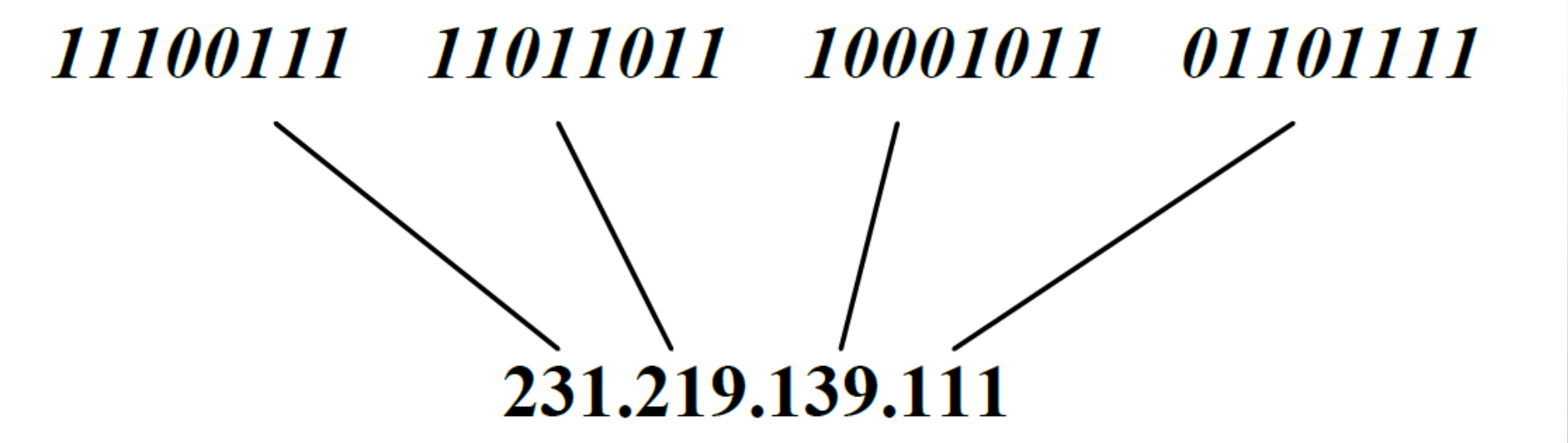

VISHWACLOUDLAB.ORG

IP Address IPV4

CLASS A – 0.0.0.0 to 127.255.255.255 --- USED FOR PUBLIC NETWORK, UNICAST TRAFFIC

CLASS B – 128.0.0.0 to 191.255.255.255 --- USED FOR PUBLIC NETWORK, UNICAST TRAFFIC

CLASS C – 192.0.0.0 to 223.255.255.255 --- USED FOR PUBLIC NETWORK, UNICAST TRAFFIC

CLASS D – 224.0.0.0 to 239.255.255.255 --- USED FOR MULTICAST

CLASS E – 240.0.0.0 to 255.255.255.255 --- USED FOR RESEARCH

VISHWACLOUDLAB.ORG

IP Address Classes

RFC 791 defines the IP protocol.

	First byte	Second byte	Third byte	Fourth byte
Class A	**0 to 127**			
Class B	**128 to 191**			
Class C	**192 to 223**			
Class D	**224 to 239**			
Class E	**240 to 255**			

Note: -- The valid addresses in class A start from 1 to 126. Network 0.0.0.0 is defined for use as a broadcast address and 127.0.0.0 is reserved for use as loopback address.

VISHWACLOUDLAB.ORG

Default Subnet Mask

Class A – 255.0.0.0 – 11111111.00000000.00000000.00000000 -- /8

Class B – 255.255.0.0 – 11111111. 11111111.00000000.00000000 -- /16

Class C – 255.255.255.0 – 11111111. 11111111. 11111111.00000000 -- /24

CLASS A – 0.0.0.0 to 127.255.255.255 --- USED FOR PUBLIC NETWORK, UNICAST TRAFFIC

CLASS B – 128.0.0.0 to 191.255.255.255 --- USED FOR PUBLIC NETWORK, UNICAST TRAFFIC

CLASS C – 192.0.0.0 to 223.255.255.255 --- USED FOR PUBLIC NETWORK, UNICAST TRAFFIC

CLASS D – 224.0.0.0 to 239.255.255.255 --- USED FOR MULTICAST

CLASS E – 240.0.0.0 to 255.255.255.255 --- USED FOR RESEARCH

VISHWACLOUDLAB.ORG

Roles of Router, Switch and PC

- **Router** → Determines the path to the different destination Network
- **Switch** → Transports the traffic from SRC and DST on **same network** on HIGH SPEED
- **PC** → Determines whether the SRC IP and DST IP are **SAME** or **DIFFERENT** network.

VISHWACLOUDLAB.ORG

PC determines whether Src IP and Dst Ip are in same or Diff network

PC does an “BINARY AND” operation between

SRC IP BINARY AND **SRC SUBNETMASK**

&

DST IP BINARY AND **SRC SUBNETMASK**

0 AND 0 = 0

0 AND 1 = 0

1 AND 0 = 0

1 AND 1 = 1

VISHWACLOUDLAB.ORG

PC - Operations

	First byte
Class A	0 to 127
Class B	128 to 191
Class C	192 to 223
Class D	224 to 239
Class E	240 to 255

Example:1 Src IP – 10.40.30.20 and Dst IP – 10.80.10.30

Src IP AND Src SubnetMask

00001010. 00101000.00011110.00010100 → 10.40.30.20 – Src IP

11111111. 00000000.00000000.00000000 → 255.0.0.0 -- Src Subnet mask

00001010. 00000000.00000000.00000000 → 10.0.0.0

10.0.0.0/8 is the Network ID for "10.40.30.20"

DST IP AND Src SubnetMask

00001010. 01010000.00001010.00011110 → 10.80.10.30 – DST IP

11111111. 00000000.00000000.00000000 → 255.0.0.0 -- SRC Subnet Mask

00001010. 00000000.00000000.00000000 → 10.0.0.0

10.0.0.0/8 is the Network ID for "10.80.10.30"

VISHWACLOUDLAB.ORG

CONCLUSION of AND operation:

Since the network ID's of the SRC IP and DST IP are the same they are in the same network.

VISHWACLOUDLAB.ORG

Traffic flow for Same Network

- PC1: Requests for MAC ID of the PC2
- SW: Does an Broadcast for the first time only
- PC2: Replies to the broadcast with its MAC ID
- SW: passess the info to PC1
- PC1: Send data to PC2.
- PC2: Replies to the data to PC1

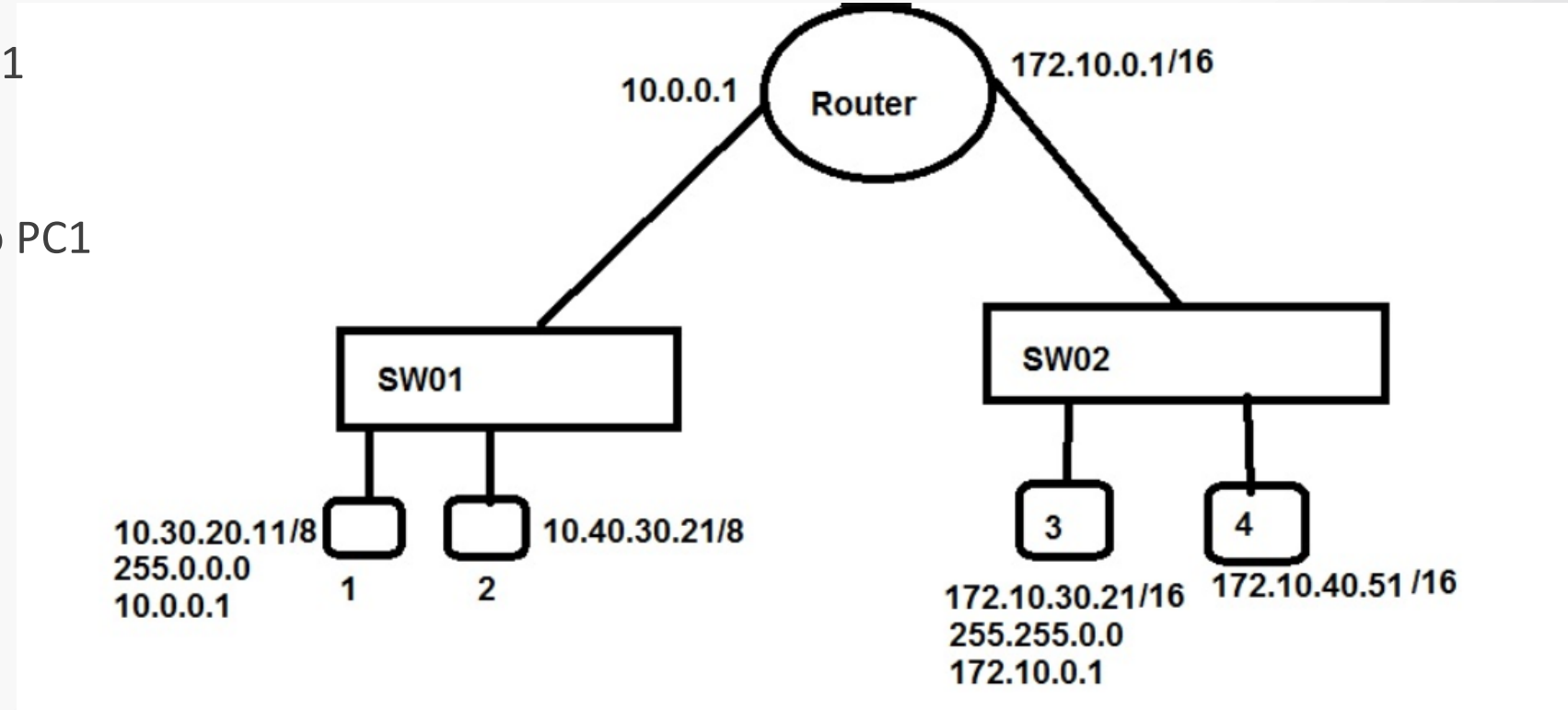

VISHWACLOUDLAB.ORG

PC - Operations

	First byte
Class A	0 to 127
Class B	128 to 191
Class C	192 to 223
Class D	224 to 239
Class E	240 to 255

Example:2 Src IP – 10.40.30.20 and Dst IP – 11.81.11.31
Src IP AND Src SubnetMask

00001010. 00101000.00011110.00010100 – 10.40.30.20

11111111. 00000000.00000000.00000000 – 255.0.0.0

00001010. 00000000.00000000.00000000 – 10.0.0.0

Statement → 10.0.0.0/8 is the Network ID for "10.40.30.20"

DST IP AND Src SubnetMask

00001011. 01010001.00001011.00011111 – 11.81.11.31

11111111. 00000000.00000000.00000000 – 255.0.0.0

00001011. 00000000.00000000.00000000 – 11.0.0.0

Statement → 11.0.0.0/8 is the Network ID for "11.81.11.31"

Results:

The Network ID's are different, so they are in different network.

VISHWACLOUDLAB.ORG

Traffic flow for Different Network

- PC1: Requests for MAC ID of the default Router
- SW01: Does Broadcast for the first time to get the MAC ID of the Router interface
- RT: Replies to the Broadcast with its MAC ID
- SW01: Replies to the PC1 with MAC ID of the Router
- PC1: Send's Packet to RT to forward it to the DST network (PC3)
- RT: Checks the Routing Table for the forwarding of the packet.
- RT: Sends an Broadcast to the switch (SW02) to get the MAC ID
  the PC3 for first time
- PC3: replies the Broadcast
- RT: Forwards the request to the PC3.

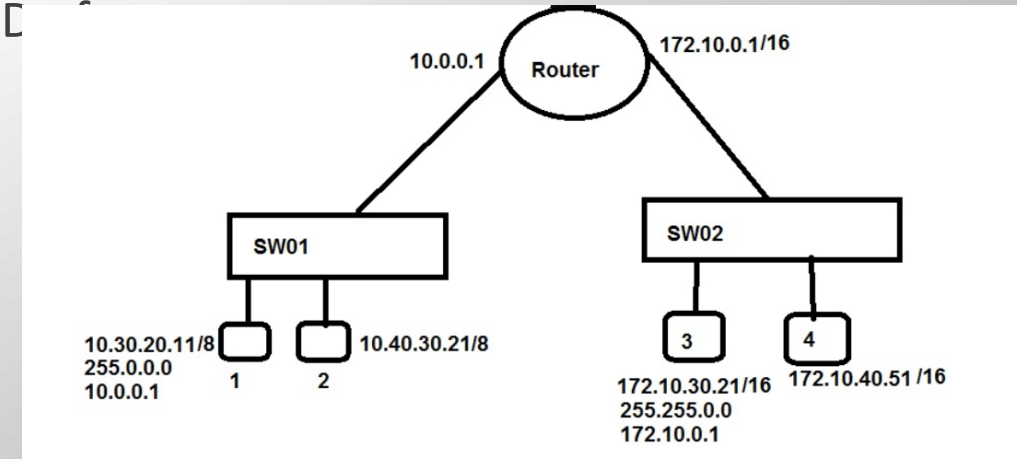

VISHWACLOUDLAB.ORG

PC - Operations

	First byte
Class A	0 to 127
Class B	128 to 191
Class C	192 to 223
Class D	224 to 239
Class E	240 to 255

Example:3 Src IP – 10.40.30.20 and Dst IP – 172.100.10.30

Src IP AND Src SubnetMask

00001010. 00101000.00011110.00010100 → 10.40.30.20

11111111. 00000000.00000000.00000000 → 255.0.0.0

00001010. 00000000.00000000.00000000 → 10.0.0.0

10.0.0.0/8 is the Network ID for "10.40.30.20"

DST IP AND Src SubnetMask

10101100. 01100100.00001010.00011110 → 172.100.10.30

11111111. 00000000.00000000.00000000 → 255.0.0.0

10101100. 00000000.00000000.00000000 → 172.0.0.0/8

172.0.0.0/8 is the Network ID for "172.100.10.30"

Results:

The Network ID's are different, so they are in different network.

VISHWACLOUDLAB.ORG

Netid and Hostid

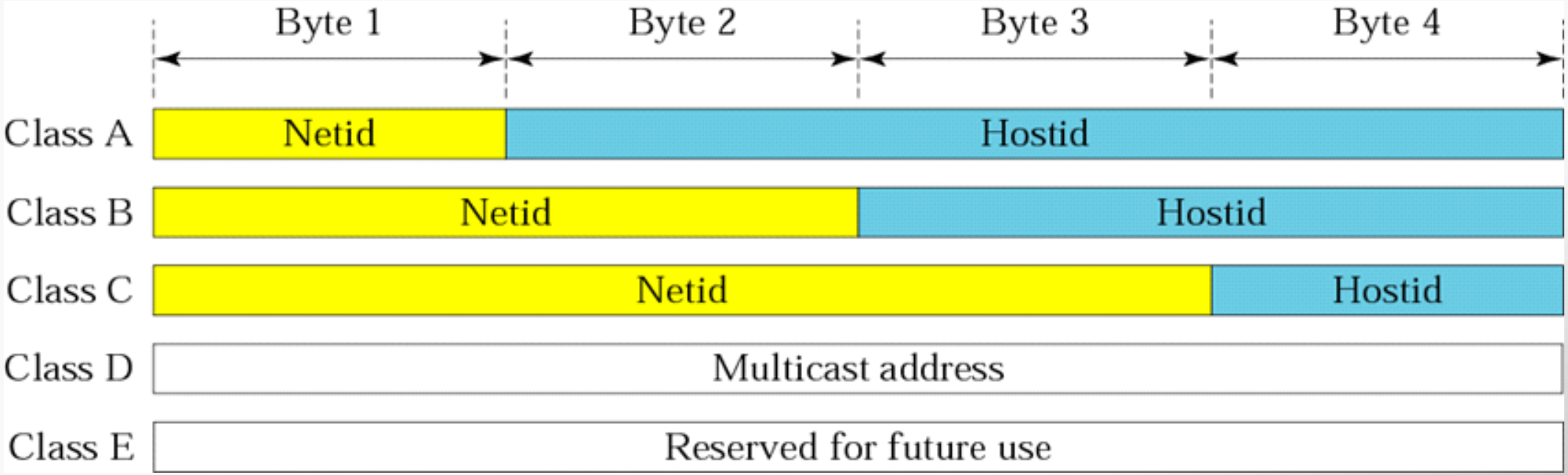

In classful addressing, an IP address in class A, B and C is divided into two parts netid and hostid. These parts are varying length, depending on the class of the address.

VISHWACLOUDLAB.ORG

Conclusion of the AND operation

- If the 1st Octet in CLASS A is same for both SRC IP and DST IP , then they are in the same network, if not they are in Different Network.
- If the 1st & 2nd Octet in CLASS B is same for both SRC IP and DST IP , then they are in the same network, if not they are in Different Network.
- If the 1st, 2nd & 3rd Octet in CLASS C is same for both SRC IP and DST IP , then they are in the same network, if not they are in Different Network.

VISHWACLOUDLAB.ORG

Number of Networks and Hosts Per each Network

CLASS A ---- NNNNNNNN.HHHHHHHH.HHHHHHHH.HHHHHHHH
Subnet Mask - **255** **. 0** **. 0** **. 0**
2_8= 0-126 2_{24}= 16,777,216

CLASS B ---- NNNNNNNN.NNNNNNNN.HHHHHHHH.HHHHHHHH
SubnetMask - **255** **. 255** **. 0** **. 0**
2_{16}= (128-191)*256 = 16K 2_{16}= 65,536

CLASS C ---- NNNNNNNN.NNNNNNNN.NNNNNNNN.HHHHHHHH
subnetMask - **255** **. 255** **. 255** **. 0**
2_{24}= (192-223)*256*256 = 2M 2_8= 256

H == HOST == IP ADDRESS == VM ==
Laptop == Desktop

VISHWACLOUDLAB.ORG

First and Last Usable IP & Broadcast IP

Src IP AND Src SubnetMask -- 10.40.30.20 AND 255.0.0.0

00001010. 00101000.00011110.00010100

11111111. 00000000.00000000.00000000

00001010. 00000000.00000000.00000000

10.0.0.0/8 is the Network ID for "10.40.30.20"

First IP –NW ID→ 00001010.00000000.00000000.00000000 – 10.0.0.0

First Usable IP → 00001010.00000000.00000000.00000001 – 10.0.0.1

Last Usable IP → 00001010.11111111.11111111.11111110 – 10.255.255.254

Broadcast IP → 00001010.11111111.11111111.11111111 – 10.255.255.255

VISHWACLOUDLAB.ORG

Summary

Same Network -- Switch

Differenet Network -- Router

8 Bits == 1 Byte

0 -- 255

10.30.40.20

Ip add V4 --- 32 bit
Ip add V6 --- 128 Bit

2600:FDEA:0000:0000:0000:0000:0000:ABCD

16 bit

x .x .x .x
8bit 8bit 8bit 8bit
00000000 -- 0
11111111 -- 255

0 - 9 and A to F

00001011.30.20.31
11111111.0.0.0

11.0.0.0/8 -- N/W ID

IPV4 -- 2^32 -- 4 Billion

IPV4
Class A -- 0.0.0.0 to 127.255.255.255
Class B -- 128.0.0.0 to 191.255.255.255
Class C -- 192.0.0.0 to 223.255.255.255
Class D -- 224.0.0.0 to 239.255.255.255 -- used for Multicast
Class E -- 240.0.0.0 to 255.255.255.255 -- Used for Research and Miltary

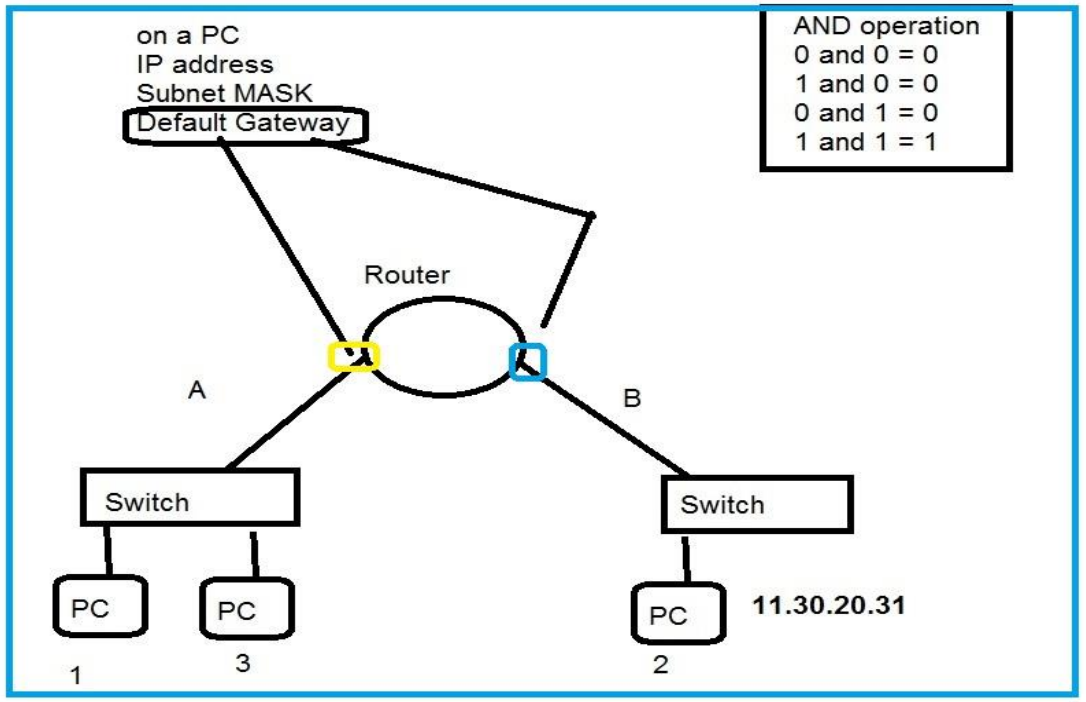

AND operation
0 and 0 = 0
1 and 0 = 0
0 and 1 = 0
1 and 1 = 1

src -- 10.40.50.61 and DST -- 10.190.200.3

IP ADD AND subnet MASK

	SRC	DST
10.40.50.61 AND 255.0.0.0	00001010.40.50.61	00001010.190.200.3
	11111111.0.0.0	11111111.0.0.0
	---	---
	00001010.0.0.0	00001010.0.0.0
	10.0.0.0/8 -- N/w ID	10.0.0.0/8 -- N/W ID

Default Subnet MASK

C-A 255.0.0.0 -- 11111111.0000000.0000000.00000000 -- /8

1st octet. 2nd . 3rd .4th

C-B -- 255.255.0.0 -- 11111111.11111111.00000000.00000000 -- /16

C-C -- 255.255.255.0 -- 11111111.11111111.11111111.00000000 -- /24

8 bit == Network ID
24 bits = Host ID. -- 2^24 == 16 M

VISHWACLOUDLAB.ORG

Problem

Scenario 1 .

Customer 1 wants 5000 IP’s in a single network

Customer 2 wants 10000 IP’s in a single network

Solution.

Provide each Customer with a CLASS B network.

140.140.0.0/16

140.141.0.0/16

VISHWACLOUDLAB.ORG

Problem Due to IPV4 Classes

- In networking world, if we need to control traffic , it can be done in an controlled way Between DIFFERENT NETWORK.
- It’s very very TOUGH to control traffic within the same network.
- Means Class A and B are having huge Amount of HOSTS in each network, and we would start wasting IP’s by assign each network to individual Customers.

- Solution to this Problem is **“SUBNETTING”**

VISHWACLOUDLAB.ORG